TD-1 GARAGE TRENCH DRAIN

NDS™ WE PUT WATER IN ITS PLACE

TECHNICAL SPECIFICATIONS

DURA SLOPE™ CHANNEL DRAINS

Specifications: NDS Dura Slope™ is a 6⅝" wide, 48" long trench drain system with a built-in slope of 0.7%. Each channel section is molded of gray structural foam polyethylene with UV inhibitors and has a 4" inside diameter with a 2" radius bottom. The system consists of 4-foot channel sections including 24 pre-sloped channel sections and 9 neutral channel sections. The sloped channel sections enable the system to extend to a length of 96 feet with a continuous slope. Add neutral channels to extend the system run to an excess of 132 feet. By incorporating central collection through the use of the catch basin assembly, the Dura Slope™ trench drain system can be extended to lengths up to 266 feet. Dura Slope™ channels are designed with the pre-installed ProFit™ locking system, which maintains structural integrity during installation and locking devices for the grating. LeveLoc™ integral re-bar supports are located at 24" intervals along each side of the channel and contain an internal protruding knob designed to grip #3 or #4 re-bar (⅜" – ½") for easier channel height adjustment during installation. DuraLoc™ tongue and groove ends connect allowing for a precise fit and ensure straight channel runs, incorporating an integral snap-lock feature that prevents joint movement during channel installation. Each channel section is molded with a bottom outlet allowing for system versatility and ensuring proper drainage. Expansion joints must be provided parallel to each side of the drain run.

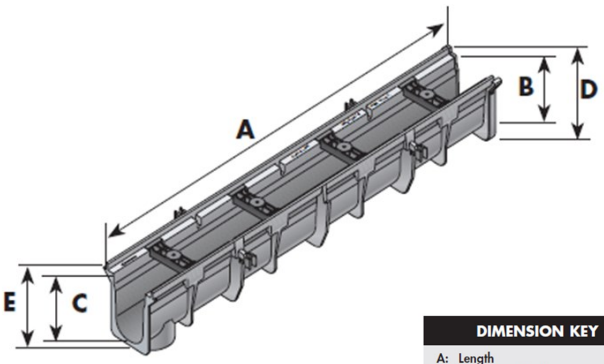

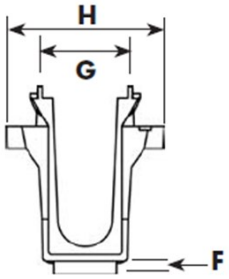

Lightweight 4 ft. modular sections
Easier handling and installation
Lower freight costs

2" radius bottom
Minimizes debris build-up

Polyethylene material
Durable and inexpensive
Less breakage versus concrete
High chemical resistance

Bottom outlet on each channel section
System versatility
Requires fewer accessories

0.7% built-in slope
Maintain optimum flow rates throughout system

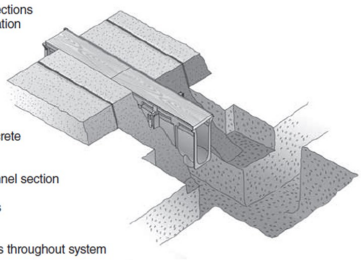

DIMENSION KEY	
A:	Length
B:	Min. Inner Depth
C:	Max. Inner Depth
D:	Min. Outer Depth
E:	Max. Outer depth

COMMON DIMENSION FOR ALL CHANNEL SECTIONS	
F: Bottom Outlet Depth	0.65"
G: Width	6"
H: Re-bar Lock Width	10.185"

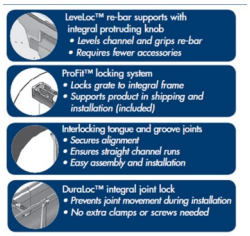

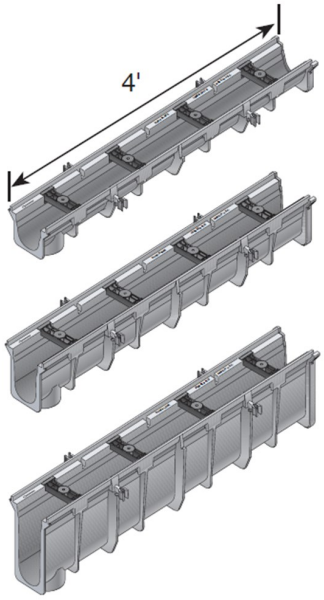

PART NUMBERS	WEIGHT (LBS)	FLOW RATE GPM	LPM	DIMENSIONS (INCHES) A	B	C	D	E	PRODUCT CLASS
DS-090N	7.452	75	284	48"	3.998	3.998	5.354	5.760	25DS
DS-091	7.524	75	284	48"	3.998	4.334	5.690	5.770	25DS
DS-091N	7.812	89	337	48"	4.334	4.334	5.692	6.103	25DS
DS-092	7.929	89	337	48"	4.334	4.670	6.026	6.106	25DS
DS-a093	8.269	103	390	48"	4.670	5.006	6.362	6.442	25DS
DS-094	8.638	117	443	48"	5.006	5.342	6.698	6.778	25DS
DS-094N	8.926	131	496	48"	5.342	5.342	6.700	7.111	25DS
DS-095	8.998	131	496	48"	5.342	5.678	7.034	7.114	25DS
DS-096	9.369	145	549	48"	5.678	6.014	7.370	7.450	25DS
DS-097	9.741	159	602	48"	6.014	6.350	7.706	7.786	25DS
DS-097N	10.040	173	655	48"	6.350	6.350	7.708	8.119	25DS
DS-098	10.112	173	655	48"	6.350	6.686	8.042	8.122	25DS
DS-099	10.484	187	708	48"	6.686	7.022	8.378	8.458	25DS
DS-100	10.856	201	761	48"	7.022	7.358	8.714	8.794	25DS
DS-100N	11.156	215	814	48"	7.358	7.358	8.716	9.127	25DS
DS-101	11.228	215	814	48"	7.358	7.694	9.050	9.130	25DS
DS-102	11.599	229	867	48"	7.694	8.030	9.386	9.466	25DS
DS-103	11.971	243	920	48"	8.030	8.366	9.722	9.802	25DS
DS-103N	12.271	257	973	48"	8.366	8.366	9.724	10.135	25DS
DS-104	12.343	257	973	48"	8.366	8.702	10.058	10.138	25DS
DS-105	12.714	271	1026	48"	8.702	9.038	10.394	10.474	25DS
DS-106	13.086	285	1079	48"	9.038	9.374	10.730	10.810	25DS
DS-106N	13.386	299	1132	48"	9.374	9.374	10.732	11.143	25DS
DS-107	13.458	299	1132	48"	9.374	9.710	11.066	11.146	25DS
DS-108	13.829	313	1185	48"	9.710	10.046	11.402	11.482	25DS
DS-109	14.201	327	1238	48"	10.046	10.382	11.738	11.818	25DS
DS-109N	14.501	341	1291	48"	10.382	10.382	11.740	12.151	25DS
DS-110	14.573	341	1291	48"	10.382	10.718	12.074	12.154	25DS
DS-111	14.945	355	1344	48"	10.718	11.054	12.410	12.490	25DS
DS-112	15.316	368	1393	48"	11.054	11.390	12.746	12.826	25DS
DS-112N	15.616	382	1446	48"	11.390	11.390	12.785	13.158	25DS
DS-113	15.688	382	1446	48"	11.390	11.726	13.082	13.162	25DS
DS-114	16.060	396	1499	48"	11.726	12.062	13.418	13.498	25DS

851 N. Harvard Avenue
Lindsay, CA 93247
800-726-1994

Visit **ndspro.com** for specs, detail drawings, and case studies

NDS® WE PUT WATER IN ITS PLACE

TD-1 GARAGE TRENCH DRAIN

NDS™ WE PUT WATER IN ITS PLACE

TECHNICAL SPECIFICATIONS

2 FT. METAL DURA SLOPE GRATE

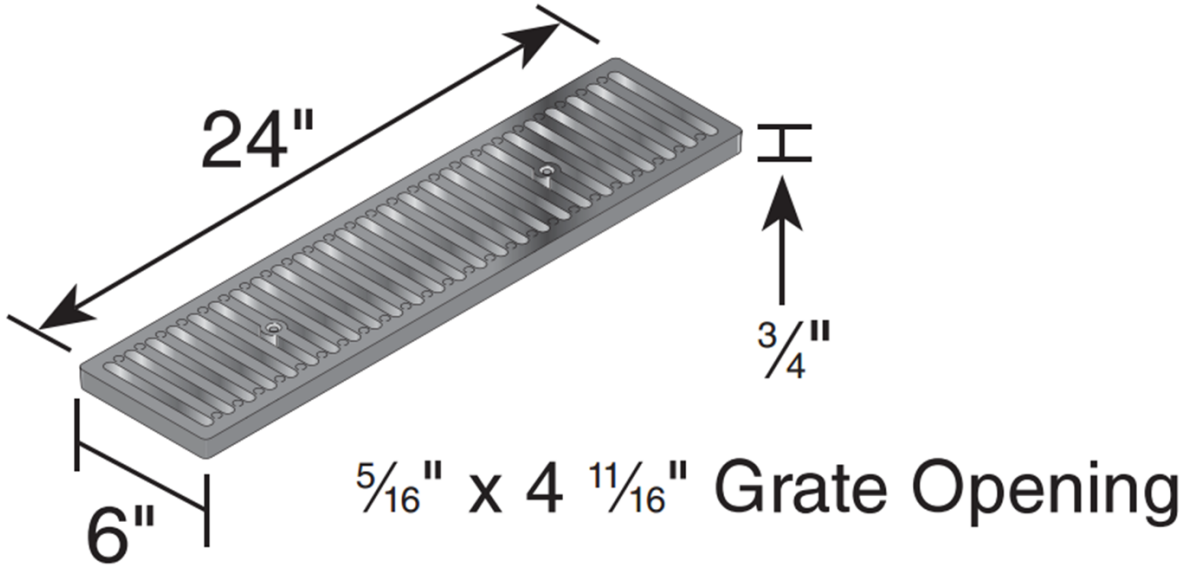

Material: Cast Iron (DS-231), ~~Ductile Iron (DS-232)~~

Color: Black

Weight: DS-231—15.90 lbs each

DS-232—15.20 lbs each

Fits: Use with Dura Slope Channel Drains and Dura Slope Catch Basin (DS-340)

Grate Opening: 20.85 in^2 per foot

Will accommodate 63.78 gallons per minute per foot with 1/2”

Load Recommendation Guide

Class D

- Loads of 326-575 psi.
- Recommended for heavy-duty hard tire forklifts at speeds less than 20 m.p.h., H-20 rated.

Note: Some installations may require a concrete collar to meet load rating. Loads are based on encasing product in concrete. Product must be installed using NDS instructions.

ADA Compliance

NDS provides a wide selection of grates that are compliant with the Americans with Disabilities Act. The ADA Accessibility Guidelines For Buildings and Facilities Section 4.5.4 specifies that ground and floor grates "shall have spaces no greater than 1/2 in (13 mm) wide in one direction."

We are pleased to provide grates that comply with these requirements, so that no individual need be limited from accessing the area safely and confidently.

To see if a grate is ADA compliant, please check the description of the product in our NDS Drainage Catalog: products that meet these requirements are marked "ADA compliant."

Like to find out more about ADA compliance and NDS? Send us your question and we'd be happy to help.

851 N. Harvard Avenue
Lindsay, CA 93247
800-726-1994

Visit ndspro.com for specs, detail drawings, and case studies

NDS WE PUT WATER IN ITS PLACE